LAG (LACP) Configuration

Successfully pass the free certification exam at IW Academy and become an Infinet Certified Engineer.

To the certification exam

- Description
- Configuration via GUI
- Configuration via CLI
- Configuration Example

CAUTION

Configurations from the scenarios below are examples that demonstrate the potential capabilities of the InfiNet Wireless devices. The configurations may vary depending on the model and firmware version. We do not recommend copying this solutions to the hardware without checking.

Description

The maximum throughput of a single port is limited by the standard 100Base-TX. The radio module throughput can be higher depending on the MCS and the channel width. The maximum achievable throughput of the InfiLINK 2x2 LITE and InfiMAN 2x2 CPE families units is up to 180 Mbps of the bi-directional aggregated stream. It is not possible to use the maximum throughput of the radio channel in one direction through one 100Base-TX port. However, the ports aggregation into one LAG allows achieving the maximum throughput in one direction.

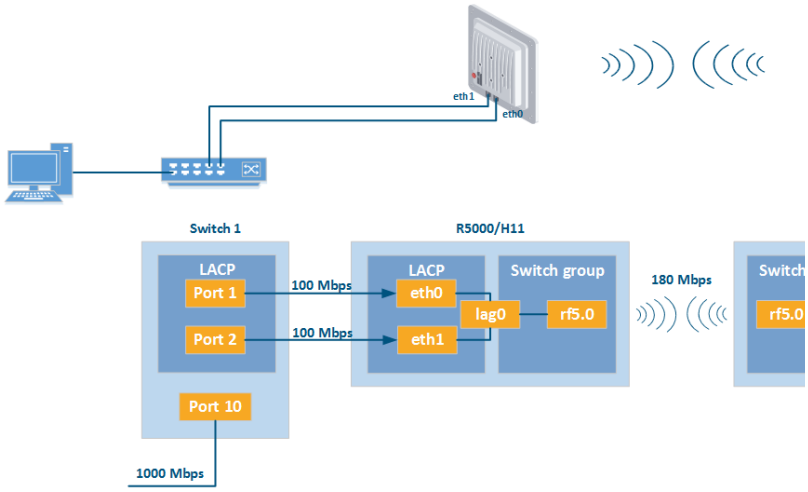

PtP scheme

This scenario can be also used in "point-to-multipoint" topologies.

Title

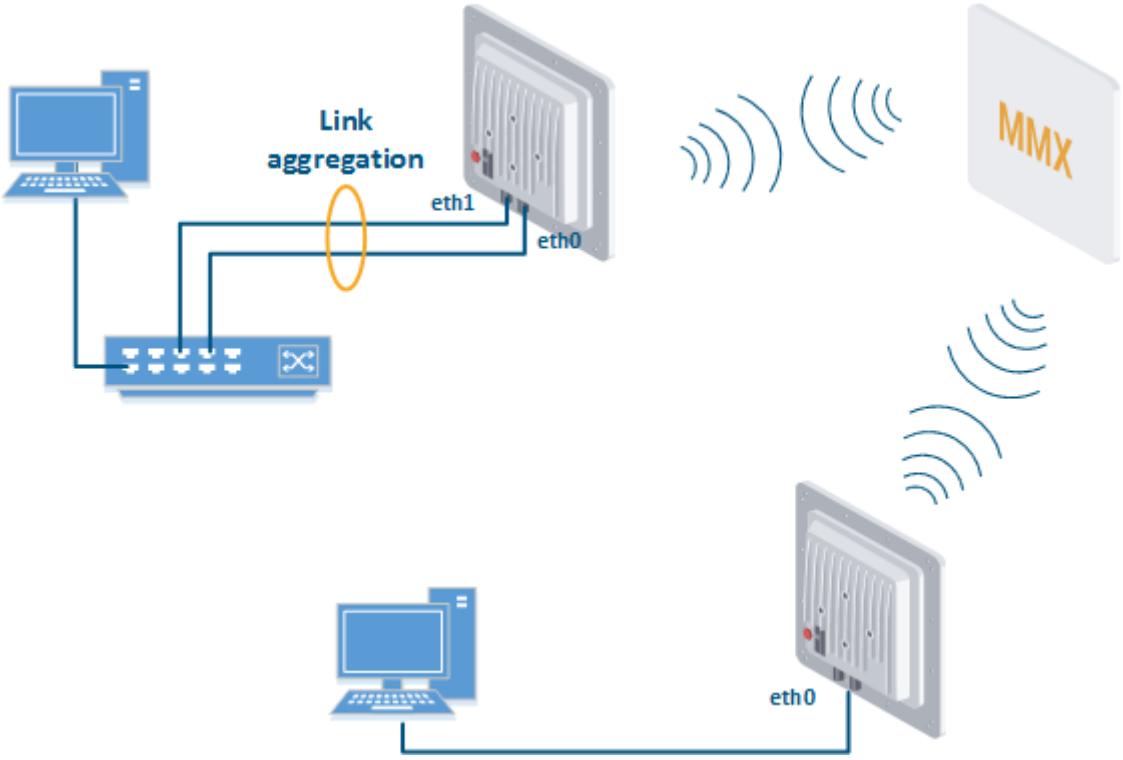

PtMP scheme

Configuration via GUI

1. Create a LAG interface.

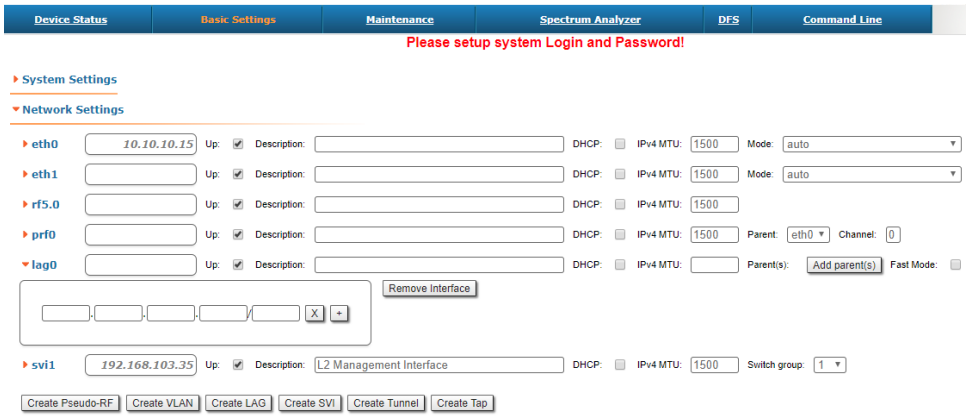

2. Add ports.

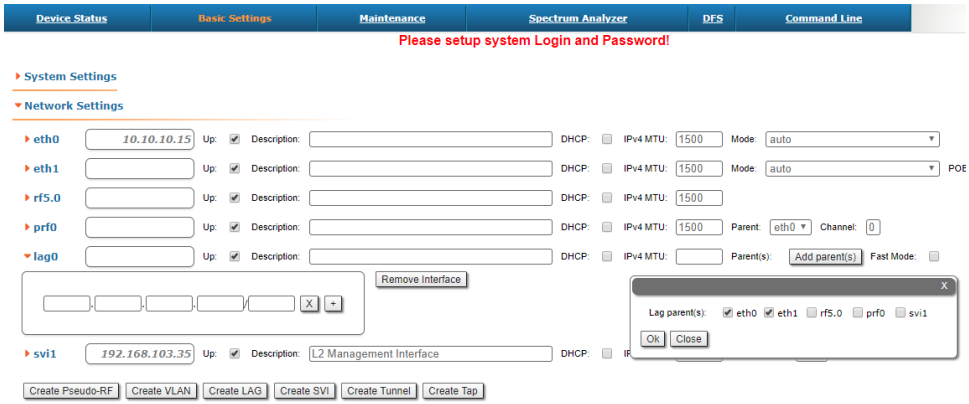

3. Select LACP (Standard or Fast mode). "Standard" LACP fully complies with the standard IEEE 802.3ad. “Fast” LACP uses only with InfiNet Wireless devices and increases efficiency and performance compared "Standart" mode.

> **CAUTION**
>
> The "Fast" mode is a proprietary extension of the LACP protocol. Compatibility of this mode is guaranteed only with devices that support MINT protocol.

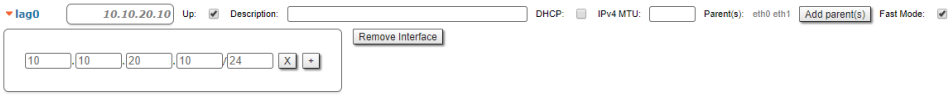

4. Assign management IP for LAG interface or SVI (optionally).
5. Configure switch group.

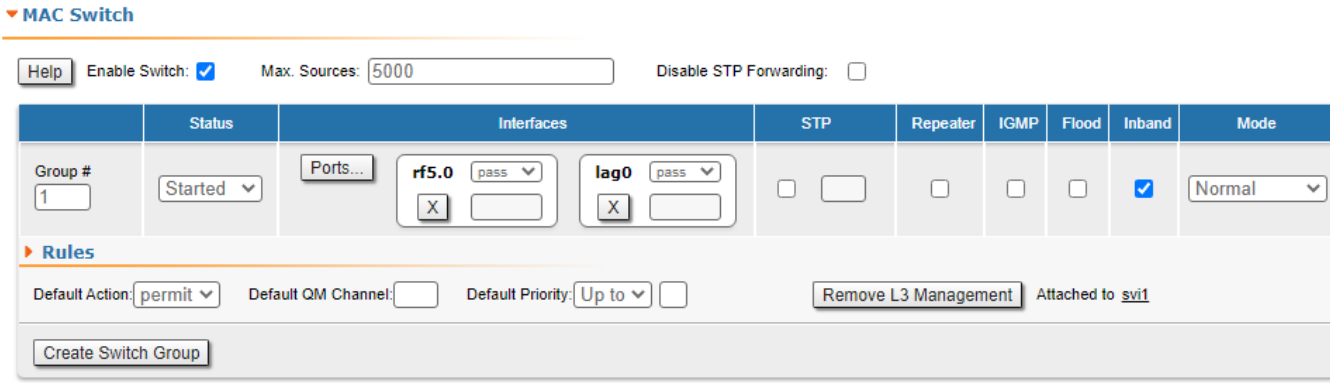

Configuration via CLI

"lag" command and its parameters description is given in the section "lag command (Link Aggregation)".

Configuration Example

Configuration via CLI:

- Create LAG interface, add eth0 and eth1 interfaces to it.

LAG Creation
`lag 0 port eth0 eth1` `ifc lag0 up`

- Assign management IP for a LAG interface or SVI (optionally).

> **CAUTION**
>
> If you associate a management IP address with a LAG interface, you must first assign the IP address to the interface and then make the interface active.

Creating Managment

```
ifc lag0 10.10.10.1/24
```

- Configure switch group.

Creating Managment

```
switch group 1 add 2 rf5.0 lag0
switch group 1 start
```